European P.C.B. type terminal blocks ／ EK series

ESK116V-..P5

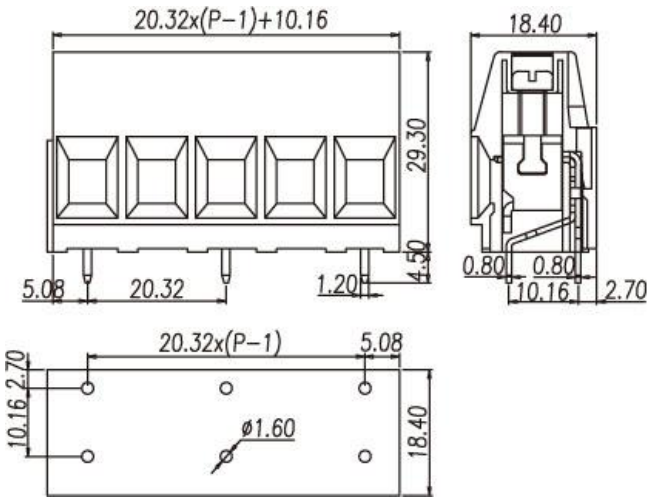

Pitch: 20.32mm

Approval		
Technical Data	UL	IEC
Rated voltage	1000V	1000V
Rated current	65A	57A
Conductor cross-section, solid (AWG/ mm^2)	20~6 / 0.5~10	
Conductor cross-section, flexible (AWG/ mm^2)	20~6 / 0.5~10	
Rated surge voltage (UL/IEC/Max.)	3 / 3 / KV	
Torque (N-m)	1.76	
Screw	M4	
Wire strip length	10~11mm	

Pole	Cat. No.
02	ESK116V-02P5
:	:
:	:
08	ESK116V-08P5

Copyright DINKLE ENTERPRISE CO., LTD. All Right Reserved.