European P.C.B. type terminal blocks ／ EK series

EHK5V

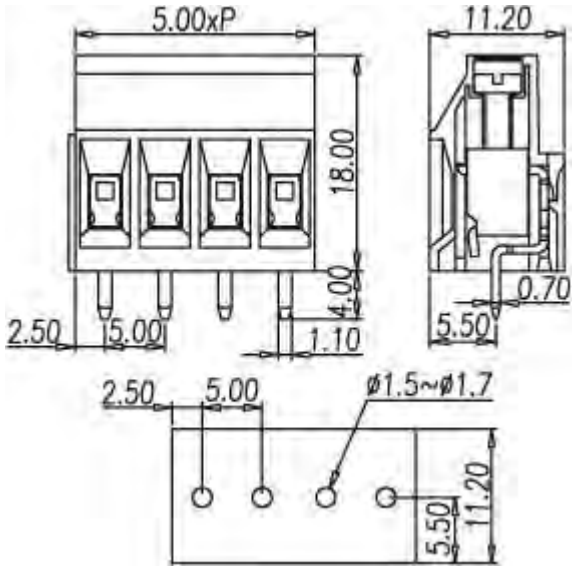

Pitch: 5.00mm

Approval		
Technical Data	UL	IEC
Rated voltage	300V	450V
Rated current	25A	24A
Conductor cross-section, solid (AWG/ mm^2)	24~12	0.5~2.5
Conductor cross-section, flexible (AWG/ mm^2)	24~12	0.5~2.5
Rated impulse voltage		4 KV
Torque (N-m)	0.45	
Screw	M2.5	
Wire strip length	6~7mm	

Pole	Cat. No.
02	EHK5V-02P
03	EHK5V-03P
:	:
:	:

Copyright DINKLE ENTERPRISE CO., LTD. All Right Reserved.