Headers(Sockets) for pluggable terminal blocks ／ ECH & EHD series

RoHS compliance

7EHDVC

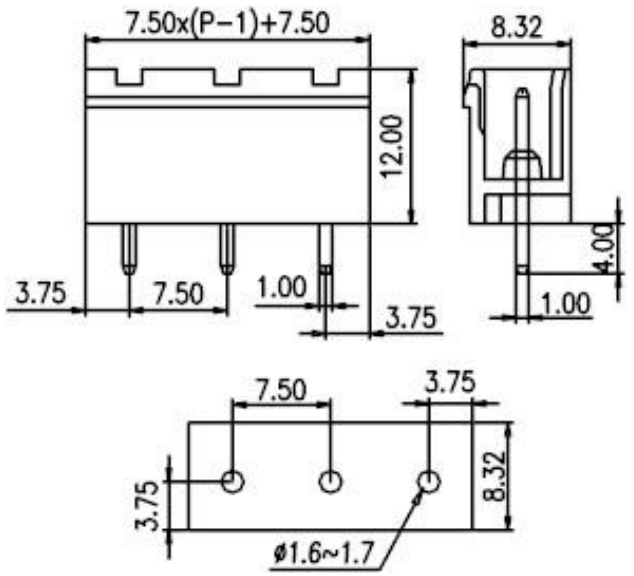

Pitch: 7.50mm

Approval		
Technical Data	UL	IEC
Rated voltage	300V	750V
Rated current	15A	17.5A
Conductor cross-section, solid (AWG/ mm^2)		
Conductor cross-section, flexible (AWG/ mm^2)		
Rated surge voltage (UL/IEC/Max.)	1.6 / 3 / 4 KV	
Torque (N-m)		
Screw		
Wire strip length		

Pole	Cat. No.
02	7EHDVC-02P
:	:
:	:
14	7EHDVC-14P

Copyright .DINKLE ENTERPRISE CO., LTD. All Right Reserved.